SPFC-NV-XXM-3/3D

Dome Fiber Optic Splice Closure Introduction

General Description

The Dome Fiber Optic Splice Closure is used in aerial, wall-mounting applications,Pole-mounting ,differences in place of the fiber cable. The closure has five round entrance ports. The shell of the product is made from PP. The shell and the base are sealed by pressing the silicone rubber with clamp allocated. The entry ports are sealed by thread plastic device. The closures can be opened again after be sealed, reused again without changing the sealing material

Features

- All property indexes are in accordance with National YD/T814-1996 Standard.
- The case body is made from imported high-intensity engineering plastics(PP) and formed the shape with mould plastics under high pressure. With the advantages of less weight, high mechanical intensity, corrosive-resistance, anti-thunderstruck and long service life.
- Vertical Fiber Closure Screw thread Machinery sealing .

Address: 14F Block D, Fortune Harbor Building, Baoan District, Shenzhen, Guangdong, China
Tel: (0086) 755 23018340 | Fax: (0086) 755 26053449 | Email: sales@sopto.com

- Overlapping fiber-melting tray and separate insulation earth unit make the disposition of the cores, expanding the capacity and cable-earthen flexible, convenient and safe.
- Outer metal component and fixing unit are made of stainless steel, so can be repeatedly used in different environments.

Technical Data

Item	Parameter
Type	SPFC-NV-XXM-3/3D
External Size	φ230*435mm
Net weight	3.2kg
Cable ports	5pcs 3 in,3 out
Way to install	Pole-mounting /Wall-mounting/Aerial installation
Cable diameter	Φ7~Φ22
Capacity of splice tray	24 single fiber
Sealing structure	Screw thread Machinery seal Silicon gum material
Max. Number of Trays	4
Sealing of inlet/outlet ports	Thread plastic device
Sealing of shell	Silicon rubber
Work Temperature	-40 °C ~+60°C
Optical fiber winding radius	≥40mm
Max Capacity	96 single fiber

Product Item

Model	Description	Size	Package	Weight/ carton
SPFC-NV-24M-3/3D	Fiber Closure Vertical type 24 Cores Max , 24 Cores Splice Tray 3 IN 3 OUT Mechanical Splicing type D	φ230*435mm	540*485*465/4PCS	13.5KG/4pcs
SPFC-NV-48M-3/3D	Fiber Closure Vertical type 48 Cores Max , 24 Cores Splice Tray 3 IN 3 OUT Mechanical Splicing type D	φ230*435mm		
SPFC-NV-72M-3/3D	Fiber Closure Vertical type 72 Cores Max , 24 Cores Splice Tray 3 IN 3 OUT Mechanical Splicing type D	φ230*435mm		

SPFC-NV-96M-3/3D	Fiber Closure Vertical type 96 Cores Max , 24 Cores Splice Tray 3 IN 3 OUT Mechanical Splicing type D	φ230*435mm		

Packing list

Number	Item	Parameter	Quantity
1	**Fiber Optic Splice Sleeve**		Allocated by the number of fibers
2	**Buffer Tube**	PVC	Allocated by the trays(According to the clients need)
3	**Nylon Ties**		4*trays
4	**Marking Note**		4*cores of fiber cable
5	**Hanging Tools**		1 pair
6	**Plastic hoop**		1 piece
7	**Plastic wrench**		4 small and 1 big
8	**Seal ring**		1 piece
9	**Sand paper**		1 piece
10	**aluminum paper**		1 piece

Tools required

- Blast Burner or Welding Gun
- Saw
- Minus Screwdriver
- Cross-shaped Screwdriver
- Pliers
- Scrubber

Dimensions& Installation Dimensions

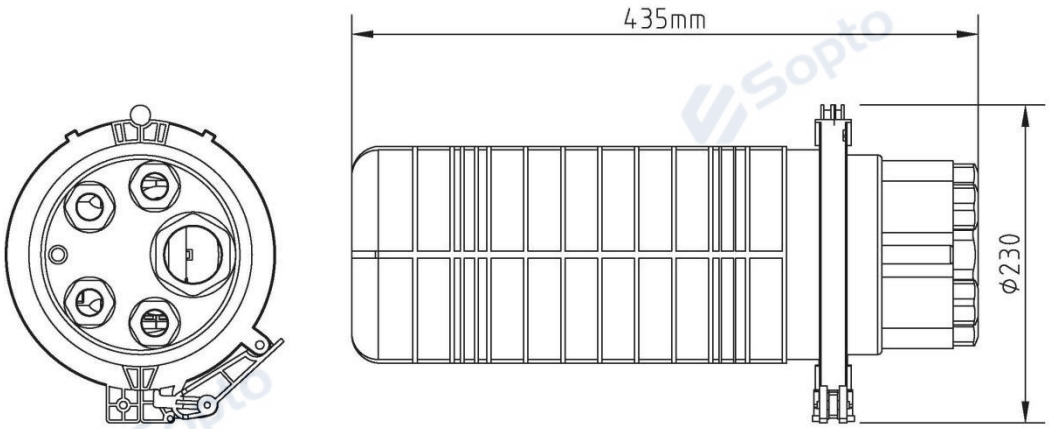
435mm
Φ230

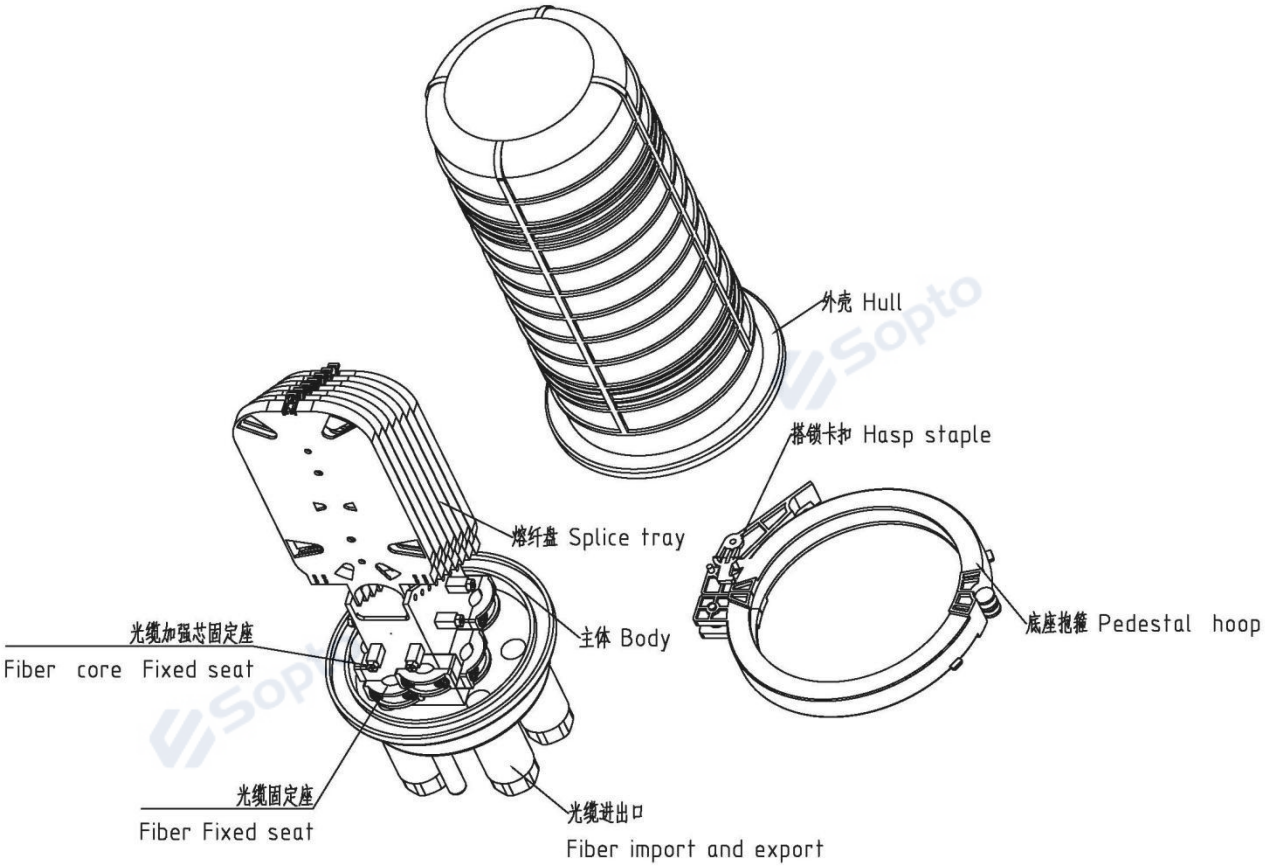
外壳 Hull
搭锁卡扣 Hasp staple
熔纤盘 Splice tray
底座抱箍 Pedestal hoop
主体 Body
光缆加强芯固定座
Fiber core Fixed seat
光缆固定座
Fiber Fixed seat
光缆进出口
Fiber import and export

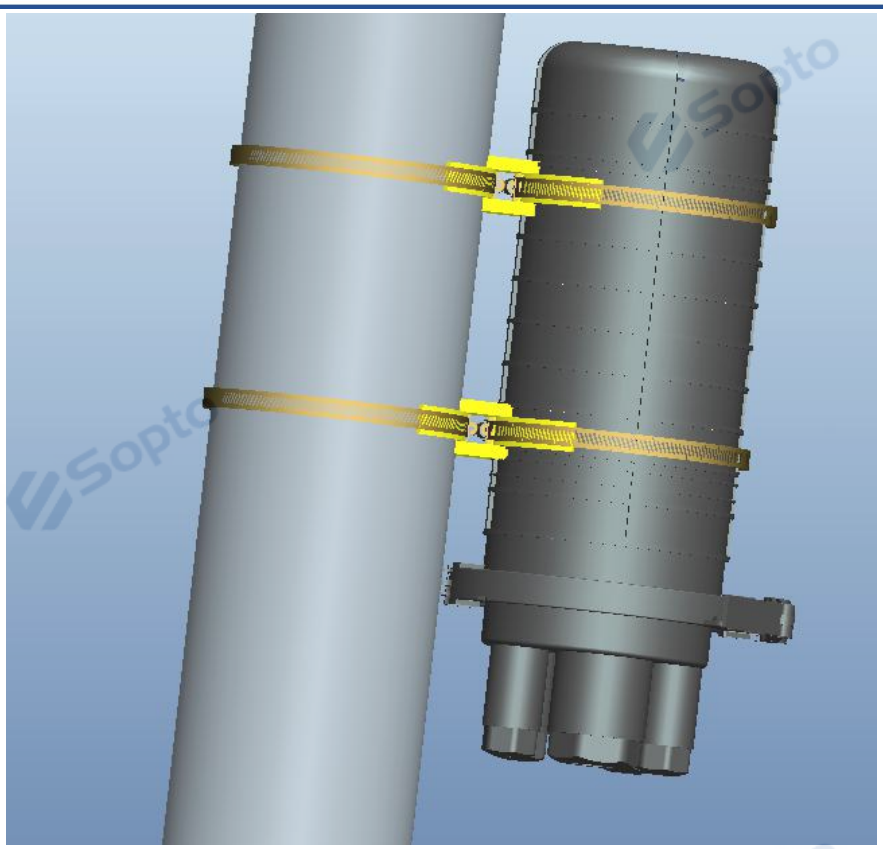

Transportation and Storage

- The package of this product adapts to any transportation ways. Avoid collision, drop, direct shower of rain & snow and insolation.
- Keep the product in a draughty and dry store, without corrosive gas in.
- Storage Temperature Range： -40℃ ~ +60℃

E-mail: sales@sopto.com
Web : http://www.sopto.com